Fig. 44: Wiper/Washer Circuit

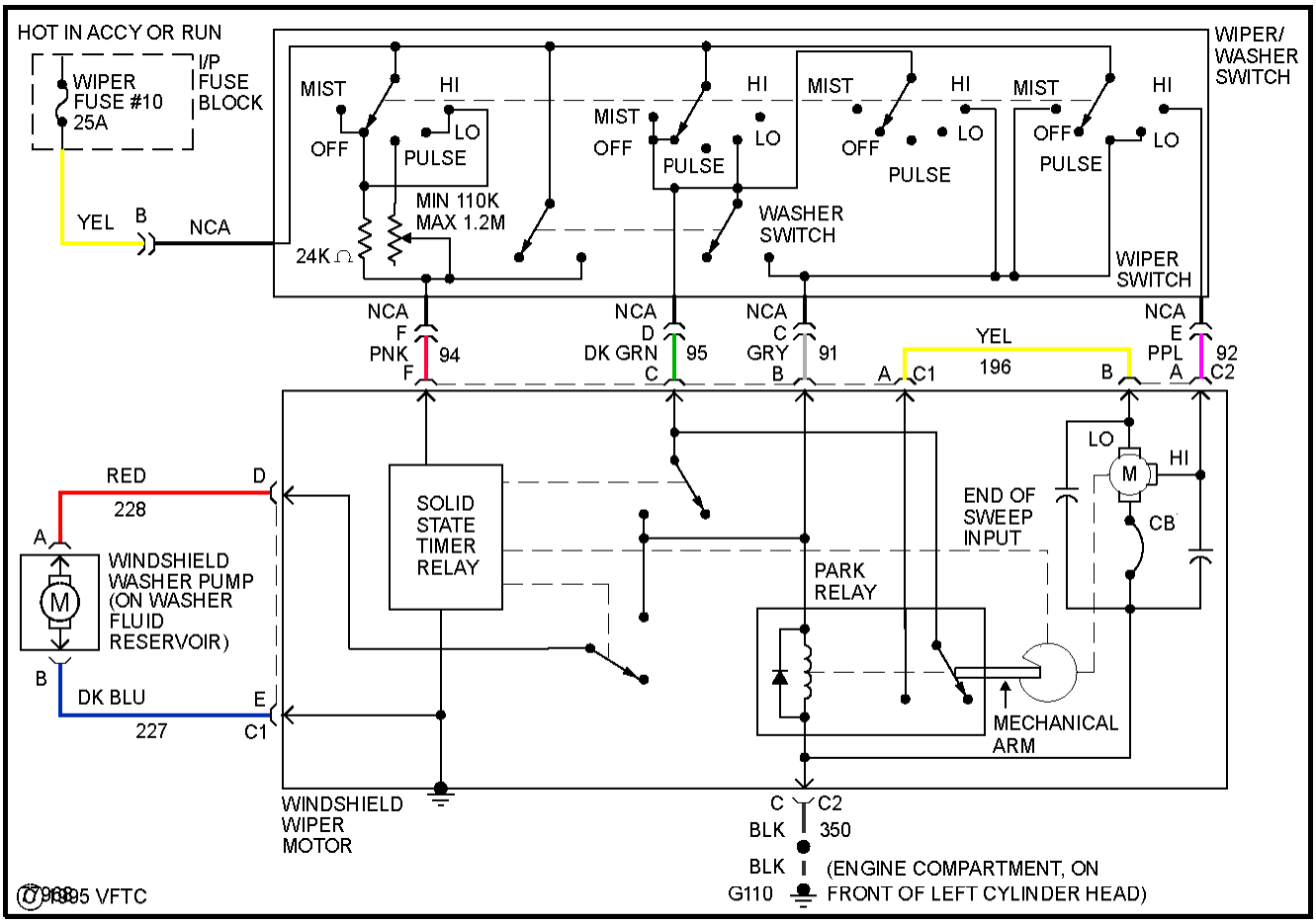

 © 2004 Mitchell Repair Information Company, LLC.