Fig. 30: Power Distribution Circuit (4 of 4)

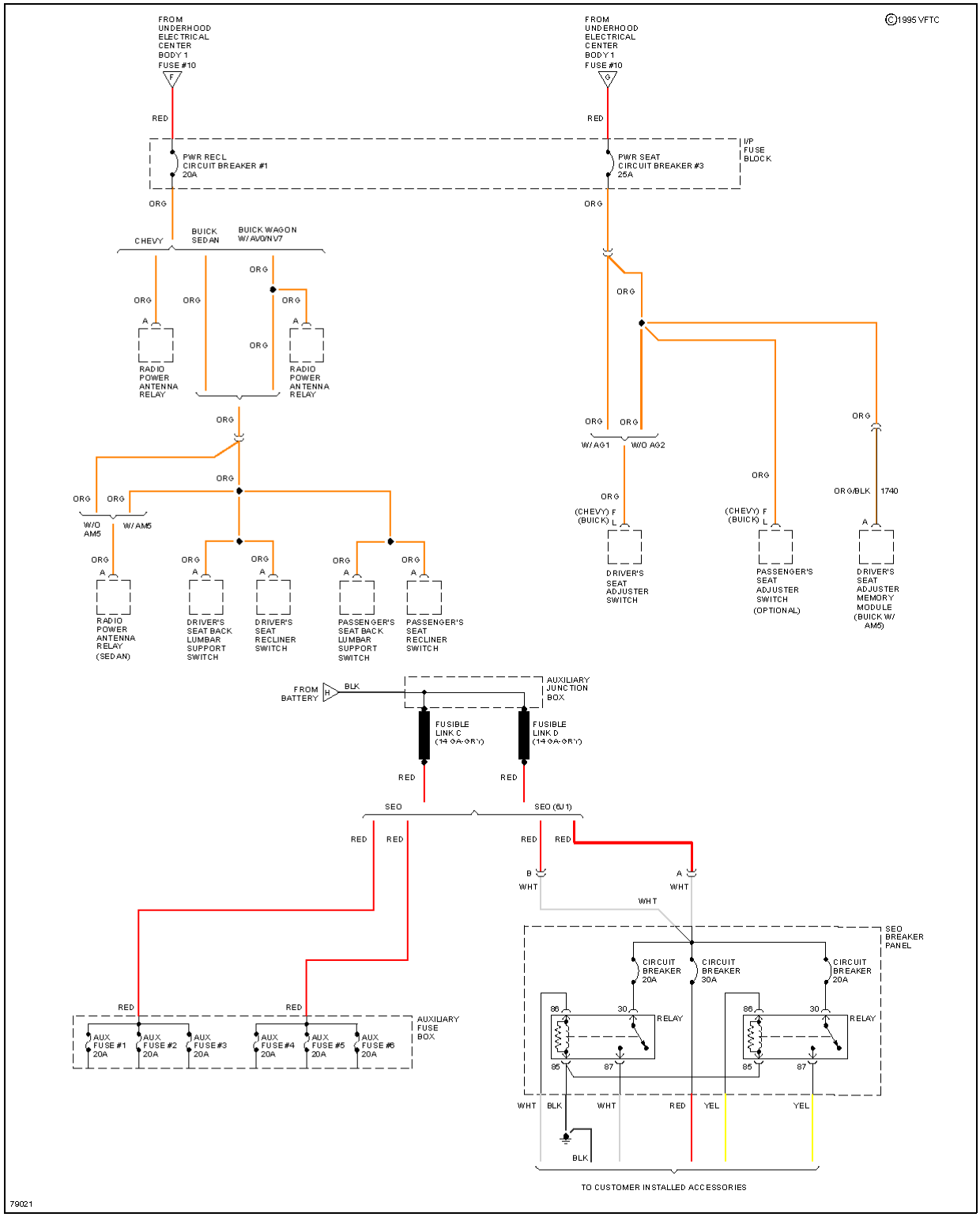

© 2004 Mitchell Repair Information Company, LLC.