Fig. 27: Power Distribution Circuit (1 of 4)

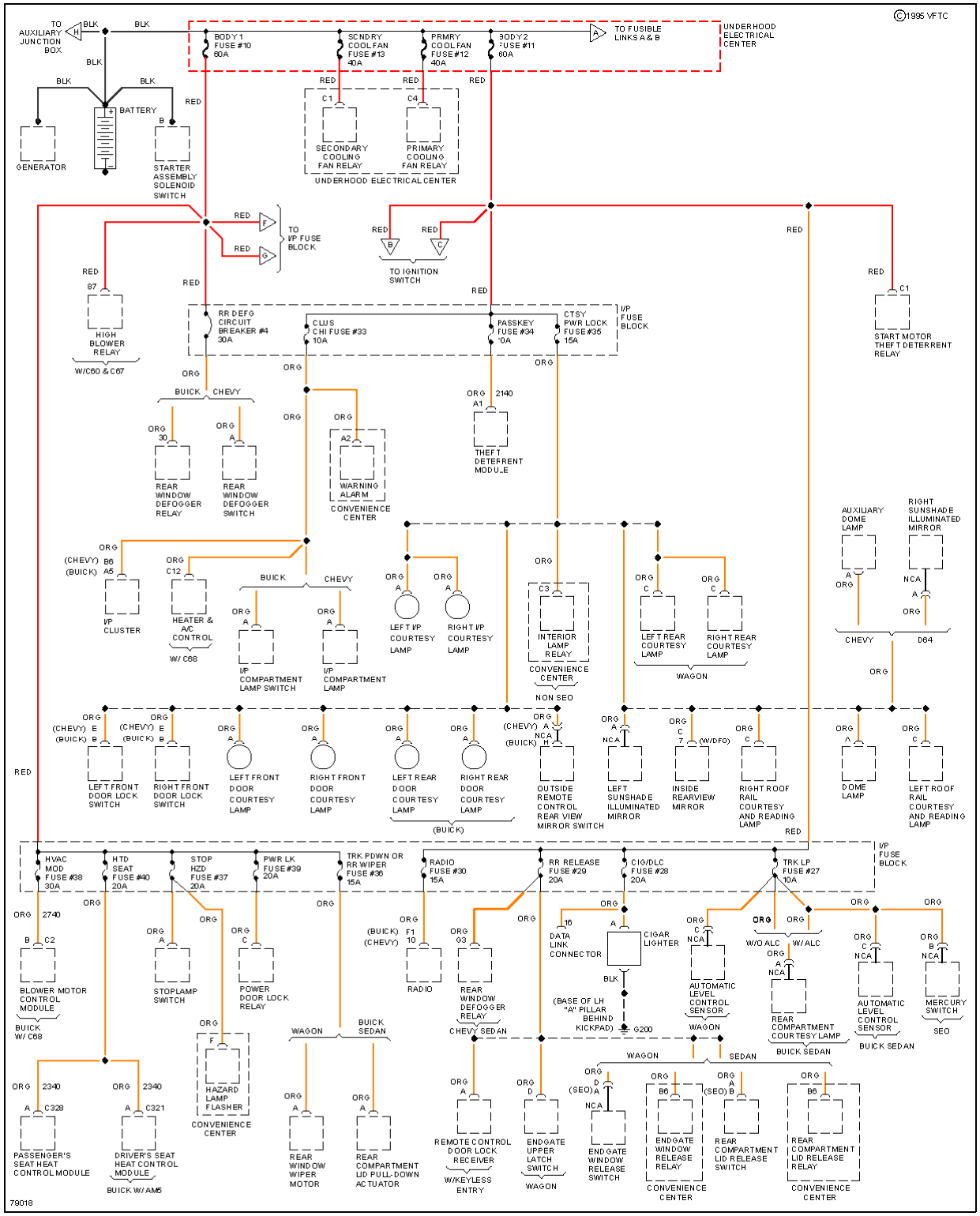

© 2004 Mitchell Repair Information Company, LLC.