Fig. 40: 5.7L (VIN P), Transmission Circuit

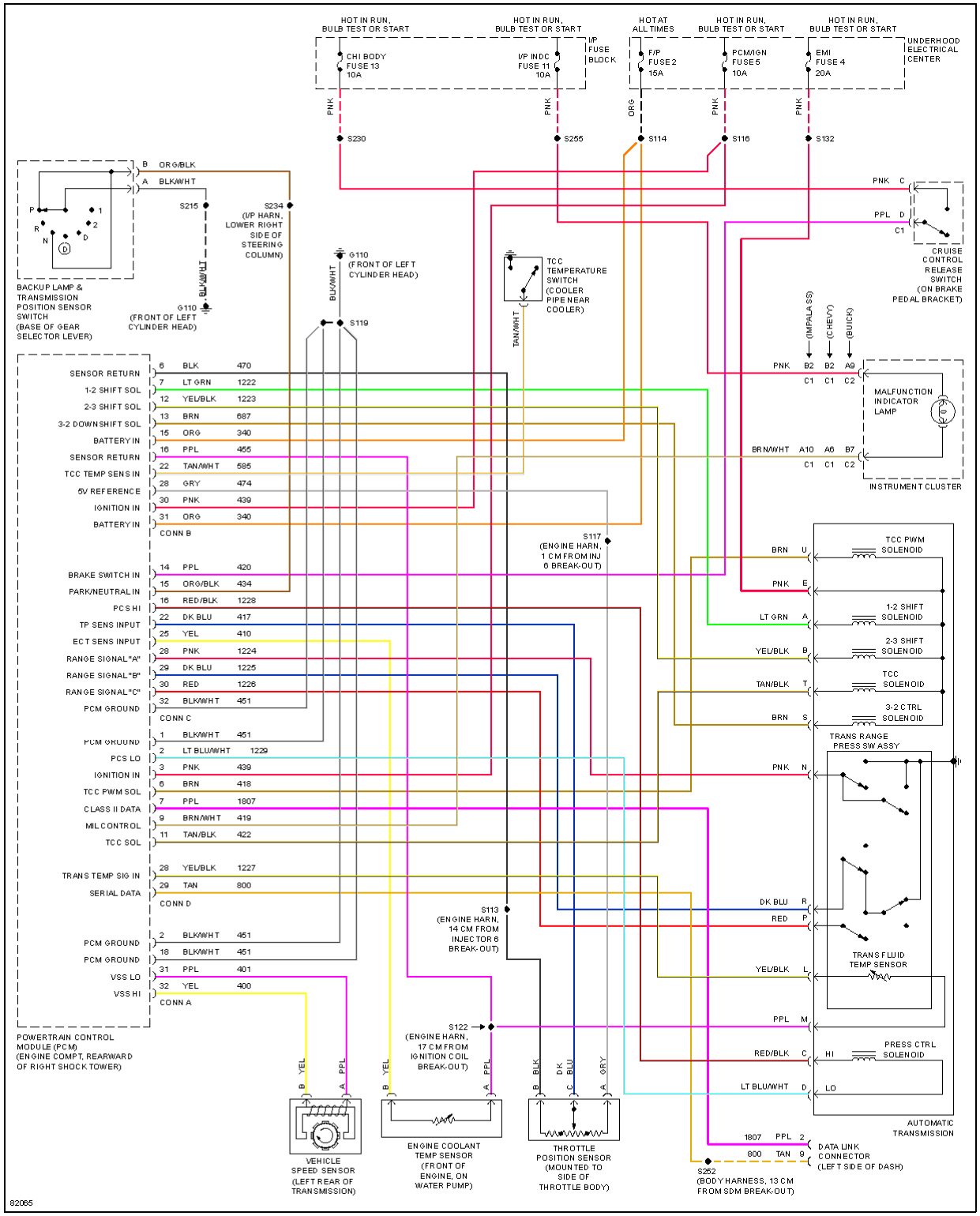

© 2004 Mitchell Repair Information Company, LLC.