Fig. 23: Instrument Cluster Circuit

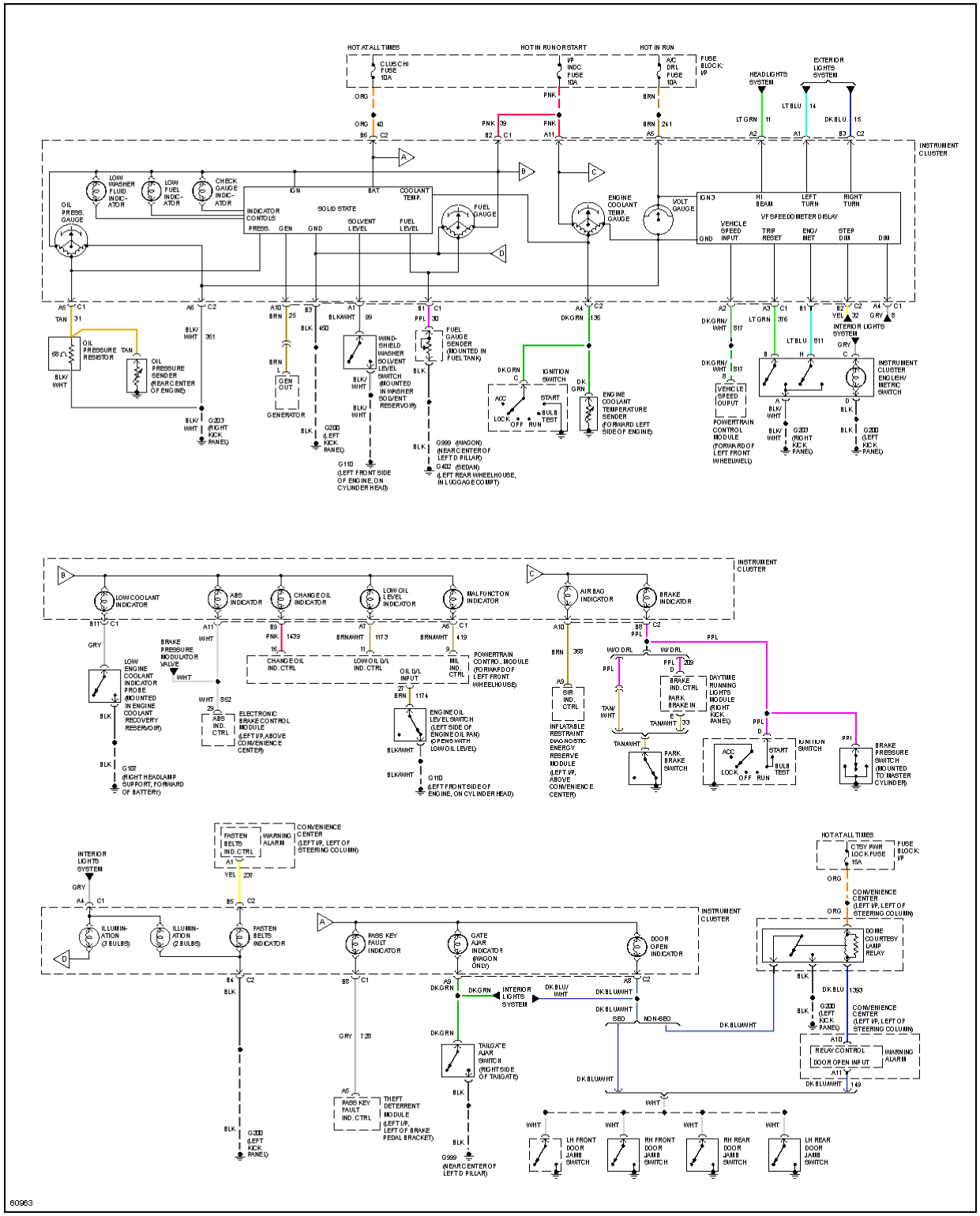

© 2004 Mitchell Repair Information Company, LLC.